LACELA

Product:Cordless Impact Drill Art.No.D221001

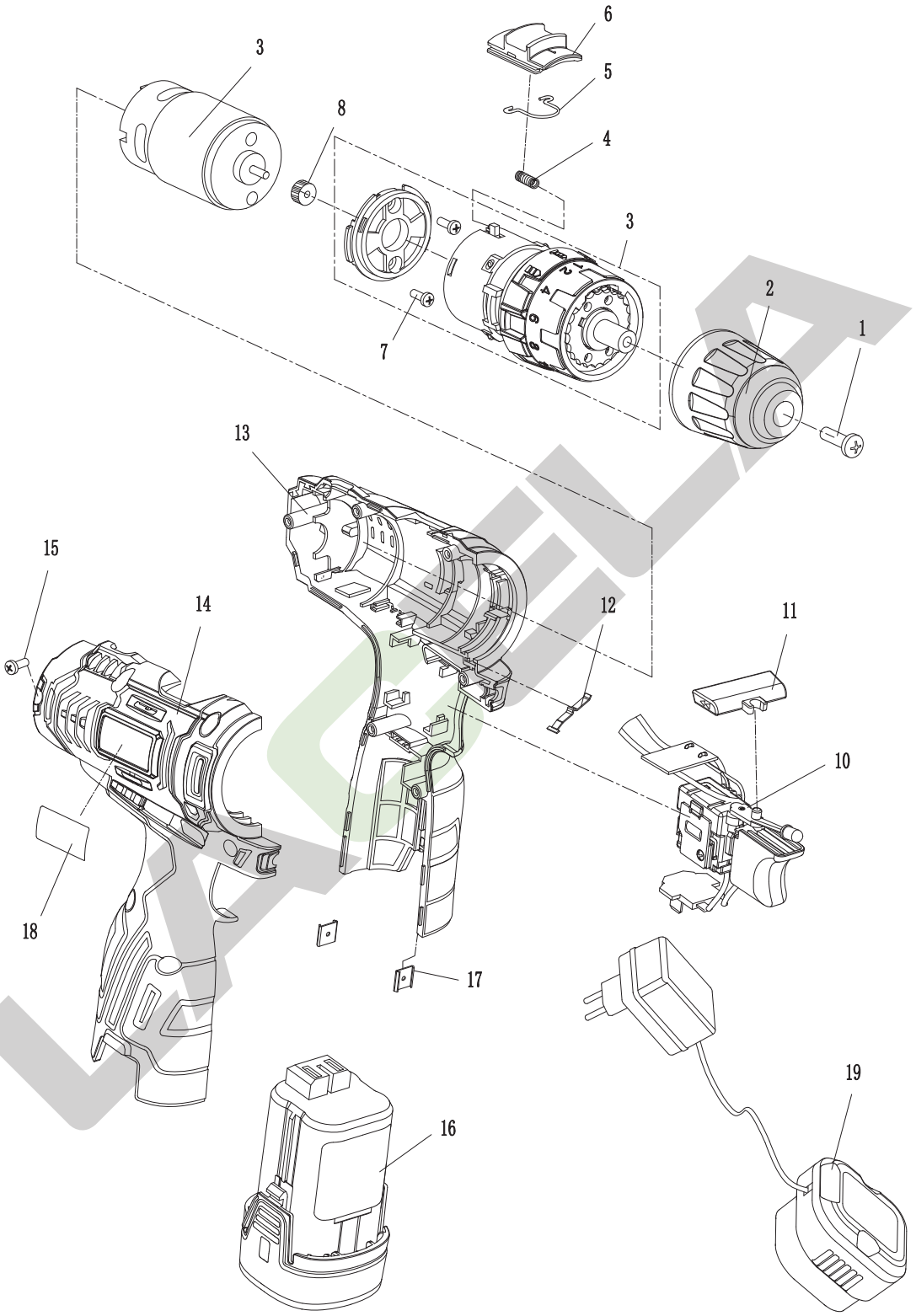

Version No.	D	Enable Time	2022.9

LACELA

Product:Cordless Impact Drill Art.No.D221001

No.	Part Name(Chinese)	Part Name(English)	Code	Qty	No.	Part Name(Chinese)	Part Name(English)	Code	Qty
1	螺钉M5×22-LH	Screw M5×20-LH	30201075	1					
2	钻夹头	Chuck	10304001062	1					
3	变速箱组件	Gear Box Assembly	10701015033	1					
4	档位弹簧	Gear push spring	10303001135	1					
5	档位推钮卡簧	Gear push circlip	30303043	1					
6	档位推钮	Gear push button	10101007190	1					
7	带平弹垫螺钉M3×6	Screw M3×6	30201163	2					
8	电机齿轮	Motor gear	10302004167	1					
9	电机14.4V	Motor	10608002057	1					
10	开关组件	Switch Assembly	10608002007	1					
11	换向推杆	Reversing Push Rod	10101007188	1					
12	T型弹片	T-Shrapnel	10401003046	1					
13	左机壳	Left Housing	10101002162	1					
14	右机壳	Right Housing	10101002161	1					
15	自攻螺钉ST3×14	Screw ST3×14	30202097	6					
16	LD1415电池包	Bettery	56101123	2					
17	尾卡	Buckle	10401008038	2					
18	铭牌	Name Plate	20302007390	1					
19	CD1415A充电器	Charger	56102044	1					
Version No.		D			Enable Time		2022.9		

LACELA